CAD FILE:

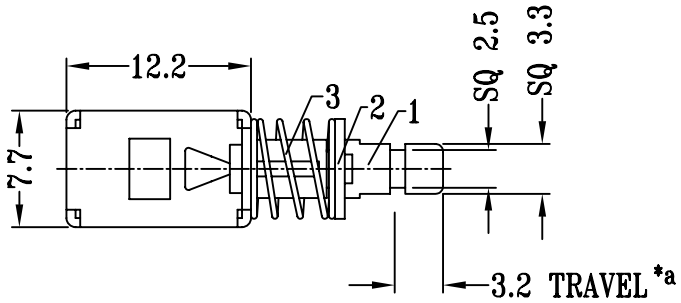

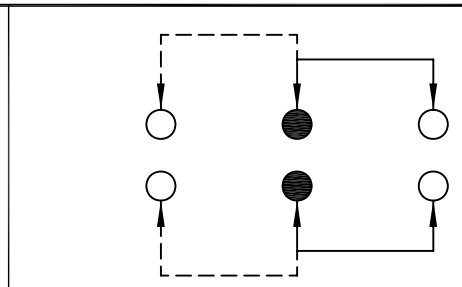

SCHEMATIC (NON-SHORTING)

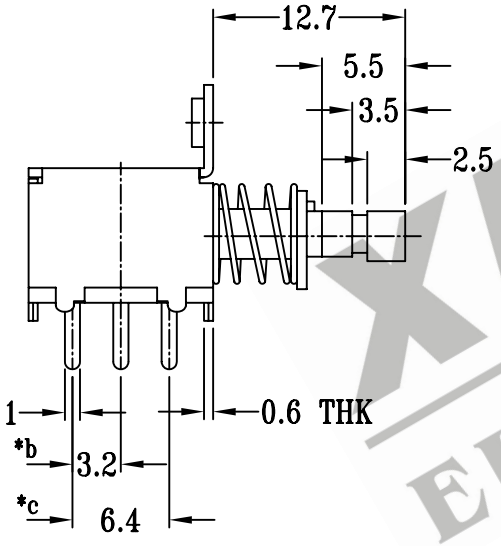

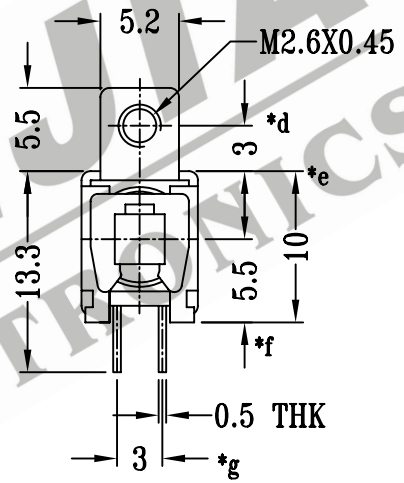

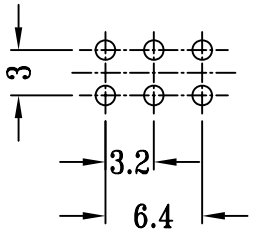

P.C.B LAYOUT

注:带"*"表示关键尺寸(7个)

NO.	PARTS	MATERIALS	Q'TY	FINISH
8	CONTACT CLIP	PBS STRIP	2	Ag PLATED
7	TERMINAL	BRASS STRIP	6	Ag PLATED OVER Ni PLATED
6	BASE	PHENOLIC RESIN	1	NATURAL
5	FRAME	STEEL STRIP	1	Ni PLATED
4	SCREEN	STEEL STRIP	1	Ni PLATED
3	SPRING	STEEL WIRE	1	Ni PLATED
2	BLOCK	STEEL STRIP	1	Ni PLATED
1	KNOB	POM	1	BLACK

TOLERANCE UNLESS SPECIFIED
WITHIN: 1.5±0.1mm
OVER : 1.5±0.2mm

SHENZHEN XIEJIA ELECTRONICS CO.,LTD.

ISSUE	DATE	DESCRIPTIONS OF REVISION	APPD.

TITLE : PUSH SWITCH
UNIT : mm
DRWG NO.: XJ-DR-PS22F07-00
MODEL: PS-22F07 (NON-LOCKED)
SCALE: 2 : 1

DWN.	ZHOUYU	2002-12-23
CHK'D	FANGYING	2002-12-23
APPD.	KANGXINAN	2002-12-23

ALL MATERIALS MUST BE COMPLIANT TO ROHS

XIEJIA ELECTRONICS